For Security
Vari-Focal

MP MEGA PIXELS

YV3.3×15SA-SA2

Applicable camera (model)

1	2/3	1/2	1/3	1/4
			■	■

VARI Vari-Focal | TELE Telephoto Long Focal | 3 Mega For Megapixel Camera | DC DC Auto Iris | CS-mt CS Mount | METAL Metal Mount | ND ND Filter | 230 Long Cable | AT Aspherical Lens | F1.5 Wide Aperture Rate

3.3×

- High image-quality monitoring with optical performance supporting 3 megapixels.
- f15-50mm, 3.3x zooming application compatible lens.
- Designed to maximize optical performance with high-accuracy aspheric lens, low-dispersion glass, and high refractive-index glass.
- Built-in ND filter of T360, supporting high sensitivity cameras.

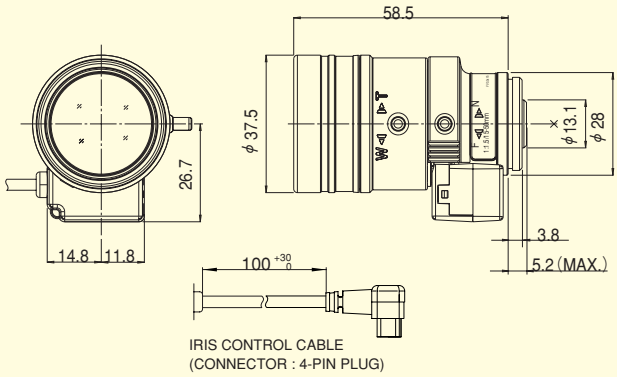

Unit : mm

Focal Length (mm)			15～50 (3.3×)
Iris Range			F1.5 ～ T360 (Equivalent to F360)
Operation	Zoom		Manual
	Focus		Manual
	Iris		Auto (DC Type) (*1)
Angle Of View (H×V)	1/3"	WIDE	18°08′ × 13°34′
		TELE	5°35′ × 4°12′
	1/4"	WIDE	13°34′ × 10°10′
		TELE	4°12′ × 3°10′
Focusing Range (From Front Of The Lens) (m)			∞ ～ 0.8
Object Dimensions at M.O.D. (H×V) (mm)	1/3"	WIDE	271 × 202
		TELE	87 × 66
	1/4"	WIDE	202 × 151
		TELE	66 × 49
Back Focal Distance (in air) (mm)			MIN.7.7
Exit Pupil Position (From Image Plane) (mm)			−36
Filter Thread (mm)			—
Mount			CS
Mass (g)			60
Coil Resistance			Drive Coil 190Ω Damping Coil 500Ω
Current Consumption			23mA (Max.) at DC 4V
Remarks			・With Metal Mount (*1) When power is turned off, iris will automatically close. YV3.3×15SA-SA2L : Long Cable Type (230mm)

Wiring

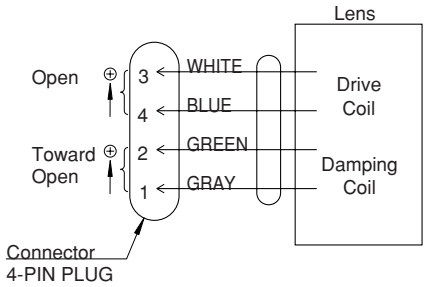

[Lens Image]

15mm

50mm