unv powered by ELBEX

DATASHEET

4K/8MP Intelligent COLOR-HUNTER IP-Camera with Light and Audible Warning

IPC2128SB-ADF40KMC-I0

Key Features

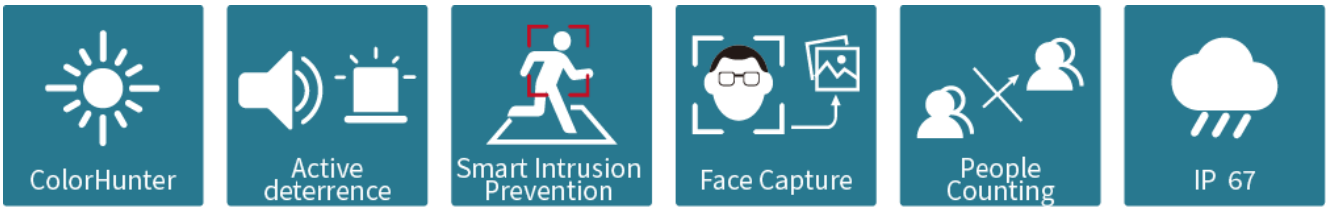

- High quality image with 8MP, 1/2.7"CMOS sensor
- 8MP (3840*2160)@20fps; 5MP (3072*1728)@30/25fps; 4MP (2560*1440)@30/25fps; 2MP (1920*1080) @30/25fps
- Ultra 265, H.265, H.264, MJPEG
- Smart intrusion prevention, include cross line, intrusion, enter area, leave area detection
- Based on target classification, smart intrusion prevention significantly reduce false alarm caused by leaves, birds and lights etc., accurately focus on human and, motor vehicle and non-motor vehicle
- Intelligent People Flow Counting and Crowd Density Monitoring
- 120dB true WDR technology enables clear image in strong light scene
- Support 9:16 Corridor Mode
- Built-in Mic
- Built-in Speaker
- Smart IR, up to 30m (98ft) IR distance
- Supports 256 G Micro SD card
- IP67 protection

Key Features

TRI-GUARD

ACTIVE DETERRENCE

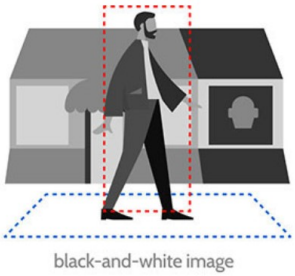

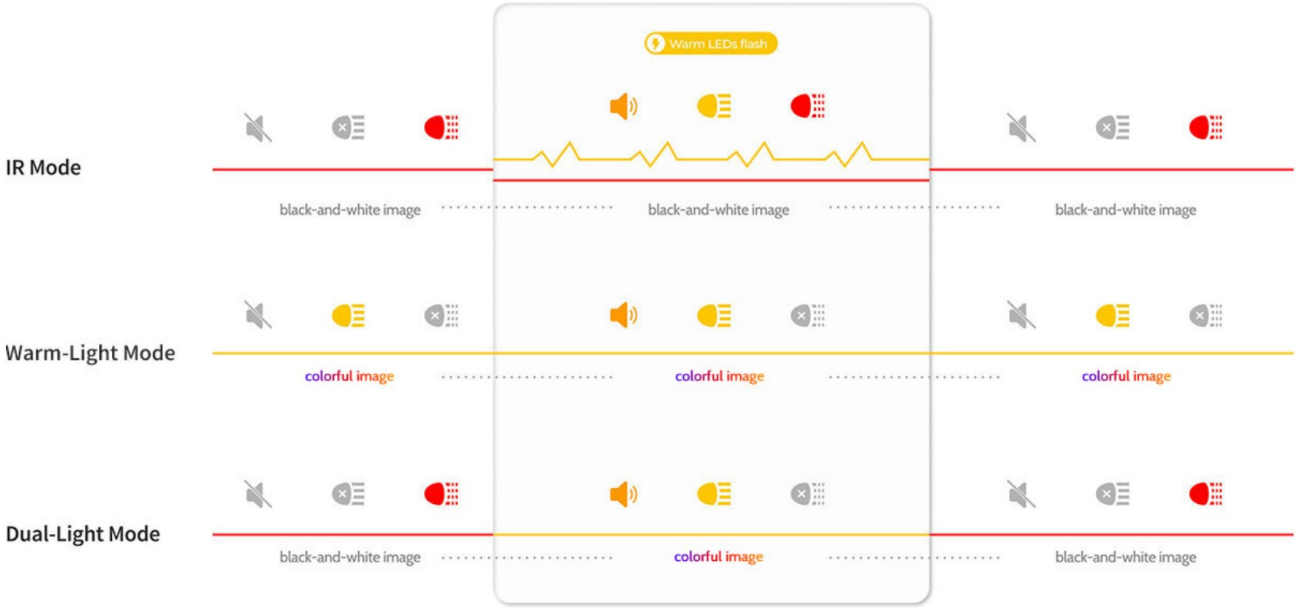

SMART INTRUSION DETECTION

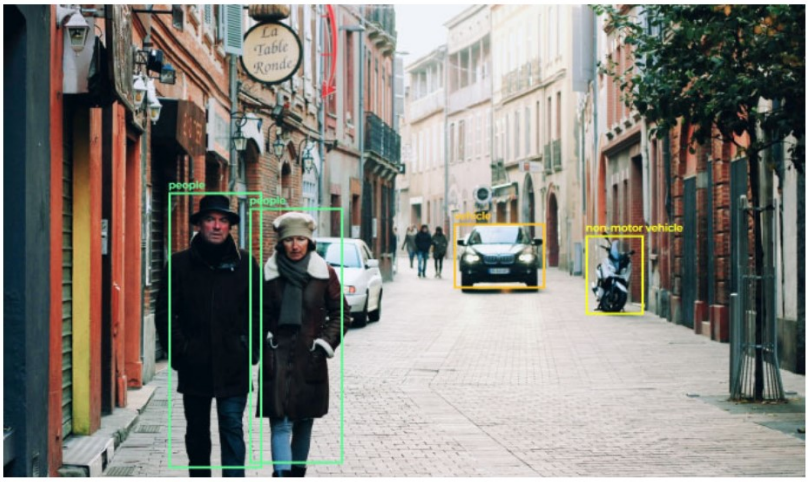

Specifications

	IPC2128SB-ADF40KMC-I0		
Camera			
Sensor	1/2.7", 8.0 megapixel, progressive scan, CMOS		
Minimum Illumination	Colour: 0.01 lux (F2.0, AGC ON) 0 lux with IR on		
Day/Night	IR-cut filter with auto switch (ICR)		
Shutter	Auto/Manual, 1 ~ 1/100000s		
Adjustment angle	Pan: 0° ~ 360°	Tilt: 0° ~ 90°	Rotate: 0° ~ 360°
WDR	120dB		
S/N	>56dB		
Lens			
Lens	4.0mm@F2.0		
Iris	Fixed		
Field of View (H)	86.5°		
Field of View (V)	44.1°		
Field of View (D)	112.5°		

DORI					
DORI Distance	Lens (mm)	Detect (m)	Observe (m)	Recognize (m)	Identify (m)
	4.0	120.0	48.0	24.0	12.0

Illuminator	
IR Range	Up to 30m (98 ft) IR range
Wavelength	850nm
IR On/Off Control	Auto/Manual
Video	
Video Compression	Ultra 265, H.265, H.264, MJPEG
H.264 code profile	Baseline profile, Main profile, High profile
Frame Rate	Main Stream: 8MP (3840*2160), Max 20fps; 5MP (3072*1728), Max 30fps; 4MP (2560*1440), Max 30fps; 1080P (1920*1080), Max 30fps; Sub Stream: 1080P (1920*1080), Max 30fps;720P (1280*720), Max 30fps; D1 (720*576), Max 30fps; 640*360,Max 30fps; 2CIF(704*288), Max 30fps; CIF(352*288), Max 30fps; Third Stream: D1 (720*576), Max 30fps; 640*360,Max 30fps; 2CIF(704*288), Max 30fps; CIF(352*288), Max 30fps;
Video Bit Rate	128 Kbps~16 Mbps
U-code	Support
OSD	Up to 8 OSDs
Privacy Mask	Up to 4 areas
ROI	Up to 8 areas
Video Stream	Triple streams
Image	
White Balance	Auto/Outdoor/Fine Tune/Sodium Lamp/Locked/Auto2
Digital Noise Reduction	2D/3D DNR
Smart IR	Support
Flip	Normal/Vertical/Horizontal/180°/90°Clockwise/90°Anti-clockwise

Dewarping	Support
HLC	Support
BLC	Support
Defog	Digital Defog
Intelligent	
Smart intrusion prevention	Support false alarm filtering: Cross Line detection, Intrusion detection, Enter Area detection, Leave Area detection
Statistical Analysis	People counting, support people flow counting and crowd density monitoring
Events	
Basic Detection	Motion detection, Ultra motion detection, Tampering alarm, Audio detection
General Function	Watermark, IP address filtering, tampering alarm, access policy, ARP protection, RTSP authentication, user authentication
Audio	
Audio Compression	G.711U, G.711A
Audio Bitrate	64 Kbps
Two-way audio	Support
Suppression	Support
Sampling Rate	8KHZ
Storage	
Edge Storage	Micro SD, up to 256GB
Network Storage	ANR, NAS(NFS)
Network	
Protocols	IPv4, IPv6, IGMP, ICMP, ARP, TCP, UDP, DHCP, PPPoE, RTP, RTSP, RTCP, DNS, DDNS, NTP, FTP, UPnP, HTTP, HTTPS, SMTP, 802.1x, SNMP, QoS ,RTMP,SSL/TLS, SSH
Compatible Integration	ONVIF (Profile S, Profile G, Profile T), API,SDK
User/Host	Up to 32 users. 2 user levels: administrator and common user
Security	Password protection, strong password, HTTPS encryption, Export operation logs, basic and digest authentication for RTSP, digest authentication for HTTP, TLS 1.2, WSSE and digest authentication for ONVIF
Client	EZStation EZView EZLive
Web Browser	Plug-in required live view: IE 10 and above, Chrome 45 and above, Firefox 52 and above, Edge 79 and above
	Plug-in free live view: Chrome 57.0 and above, Firefox 58.0 and above, Edge 16 and above
Interface	
Audio I/O	N/A
Alarm I/O	N/A
RS485	N/A
Built-in Mic	Support
Built-in Speaker	Support
WIFI	N/A
Network	1 RJ45 10M/100M Base-TX Ethernet
Video Output	N/A
Alarm Light	Support
Certifications	
EMC	CE-EMC (EN 55032: 2015+A1:2020,EN 61000-3-3: 2013+A1: 2019,EN IEC 61000-3-2: 2019+A1: 2021,EN 55035: 2017+A11:2020) FCC (FCC CFR 47 part15 B, ANSI C63.4-2014)
Safety	CE LVD (EN 62368-1:2014+A11:2017) CB (IEC 62368-1:2014) UL (UL 62368-1, 2nd Ed., Issue Date: 2014-12-01)

Environment	CE-RoHS (2011/65/EU;(EU)2015/863); WEEE (2012/19/EU); Reach (Regulation (EC) No 1907/2006)
Protection	IP67 (IEC 60529:1989+AMD1:1999+AMD2:2013)
General	
Power	DC 12V±25%, PoE (IEEE 802.3af)
	Power consumption: Max 10.5W
Power Interface	Ø 5.5mm coaxial power plug
Dimensions (L × W × H)	191× 75 × 74mm (7.5” × 3.0” × 2.9”)
Weight	0.41kg (0.90lb)
Material	Metal
Working Environment	-30°C ~ 60°C (-22°F ~ 140°F), Humidity: ≤95% RH (non-condensing)
Strorage Environment	-30°C ~ 60°C (-22°F ~ 140°F), Humidity: ≤95% RH (non-condensing)
Surge Protection	4KV
Reset Button	Support

Dimensions

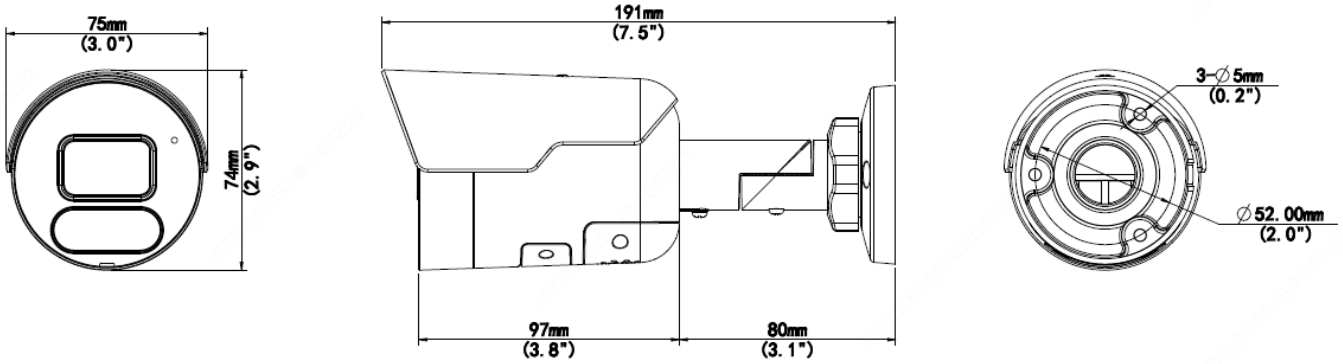

Accessories

TR-JB05-B-IN

Junction Box

TR-UP06-C-IN

Pole Mount